MultiMag™

- Meets AWWA C708 Accuracy
- Hot or Cold meter models
- Pulse Output
- ECO Brass - No Lead

Distributed By
Meter, Valve & Control
877-566-3837

The MultiMag™ series water meters utilize multijet principles for accurate water measurement and are known for their simplicity, longevity and accuracy. The MultiMag™ is tested to the most recent AWWA C708 accuracy standards. The pulse output capability allows for the MultiMag™ to be used for remote reading. The MultiMag™ is intended for horizontal applications. In addition to the various sizes, the MultiMag™ is also available in hot and cold versions.

Technical Characteristics

TEMPERATURE .....Cold .....105° F
Hot .....194° F
MAX PRESSURE 150psi
MATERIALS .....Body.....ECO Brass - NO LEAD
Internals .....Thermoplastic
PULSE OUTPUT.....6mA @ 12vdc
PULSE VALUE.....1/1gal or 1/10gal

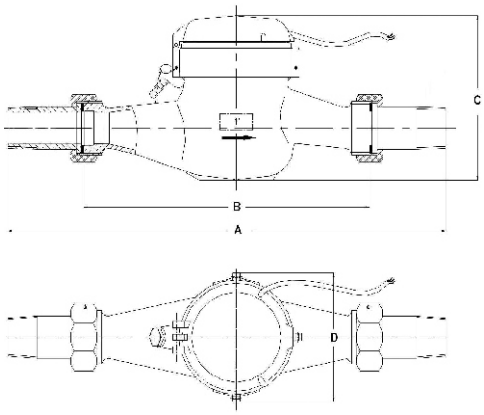

FLOW RATE					
GPM	3/4”	1”	1-1/2”	2”	% Error
MIN	0.5	0.75	1.5	2	3
MAX	30	50	100	160	1.5
CONTINUOUS	15	25	50	80	
RANGE	2-30	3-50	5-50	8-160	

DIMENSIONS				
	3/4”	1”	1-1/2”	2”
A	11.5”	15.6”	17.8”	21.0”
B	7.5”	10.75”	12.625”	15.25”
C	5.3”	5.3”	6.8”	6.8”
D	3.9”	3.9”	4.8”	4.8”
Weight	4 lb.	5 lb.	10 lb.	14 lb.